MAT 133-S | MAT 153-S

SpeechLine Wired Connection Guide

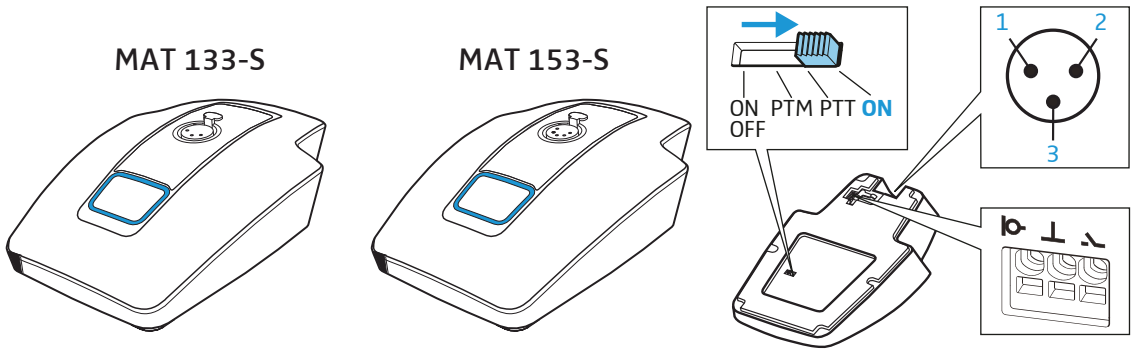

1 ground
2 microphone +
3 microphone -

logic in
ground
logic out

Sennheiser TeamConnect

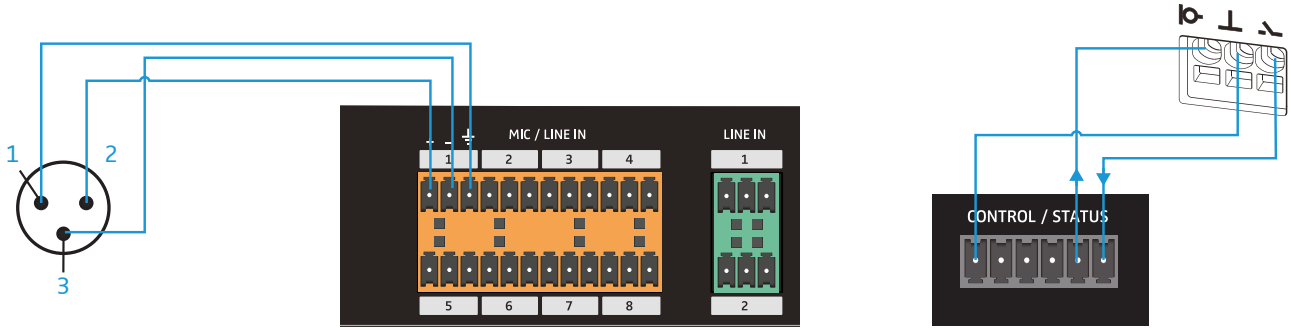

TeamConnect Central Unit

TeamConnect Combox

Biamp Nexia / Tesira

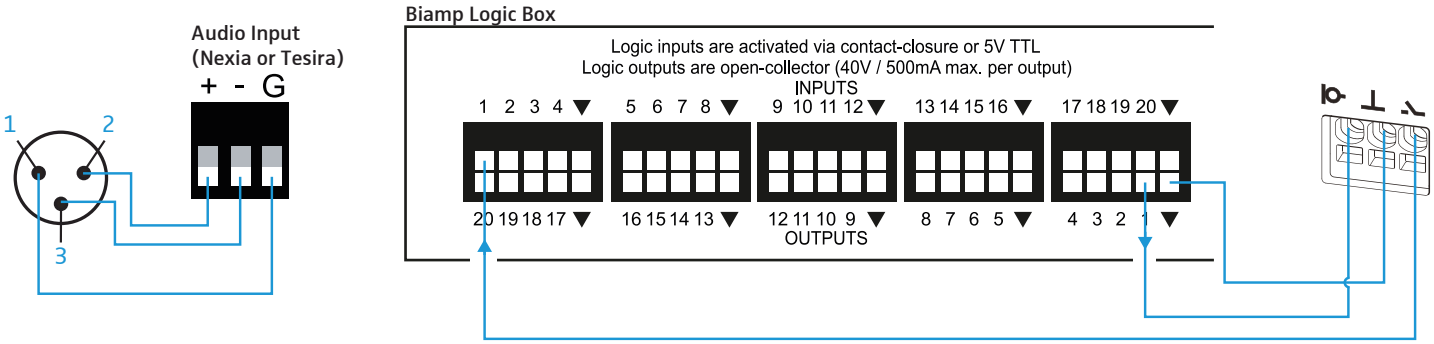

POLYCOM SoundStructure

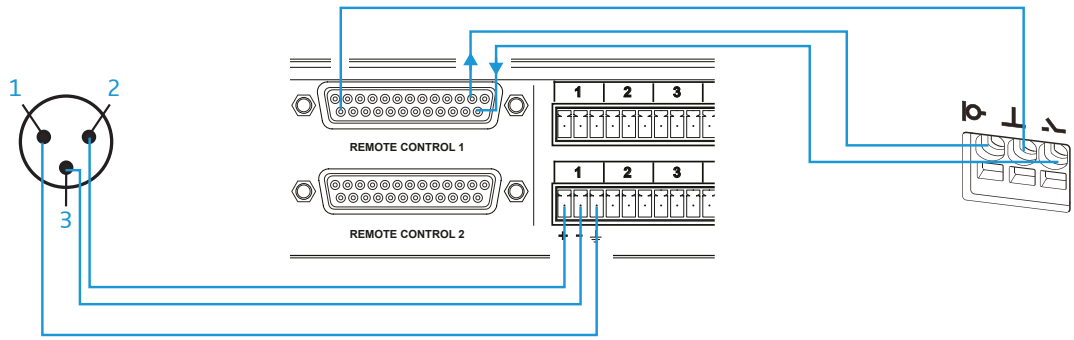

Sennheiser electronic GmbH & Co. KG
Am Labor 1, 30900 Wedemark, Germany
www.sennheiser.com

TI 1014 v1.0

SENNHEISER